tissin

Smart Valve Positioner
TS900 Series

- Quick and easy auto calibration
- Flapper / Nozzle type Torque motor
- By-pass valve (A/M switch) installed
- PST & Alarm & Diagnostic function
- Advanced diagnostics

tissin
Solutions for control valve system

tissin

Smart Valve Positioner
TS900/TS905 Series (Flame proof type)

Description

TS900 Smart Valve Positioner controls the valve stroke in response to an input signal of 4-20mA from the control panel, DCS, or calibrator.

Certified

IP66 HART COMMUNICATION PROTOCOL SIL2 SGS TÜV SAAR FUNKTIONALE SICHERHEIT GEPRÜFT FUNCTIONAL SAFETY APPROVED

Features

TS900

TS905

- Quick and easy auto calibration
- Large flow pilot valve (Over than 100LPM)
- Flapper / Nozzle type Torque motor
- By-pass valve (A/M switch) installed
- HART communication (HART 7)
- Partial stroke test (PST) function
- Alarm function (Option)
- Advanced diagnostics (Option)

Structure

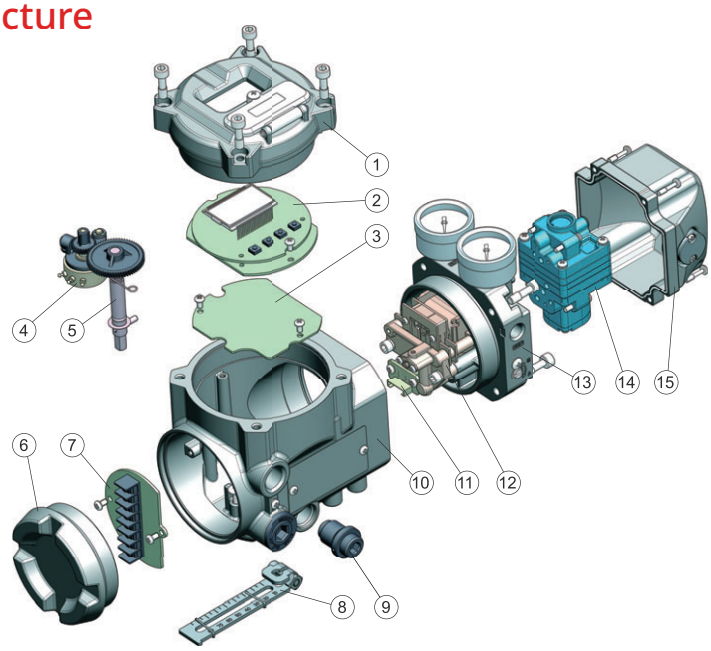

1. Body cover
2. Main PCB
3. PCB guide
4. Potentiometer
5. Main shaft
6. Junction box cover
7. Terminal PCB
8. Feedback lever
9. Plug drain
10. Base body
11. Pressure sensor(Option)
12. Torque motor
13. Air connection block
14. Pilot valve
15. Pilot valve cover

TS900/TS905 Series (Flame proof type)

Specifications

Model		TS900	TS905
Input signal		4~20mA DC	
Impedance		500Ω at 20mA DC	
Supply pressure		0.14~0.7MPa	
Stroke		10~150mm(Linear), 0~90°(Rotary)	
Air connection		NPT1/4, G1/4	
Gauge connection		NPT1/8	
Conduit		NPT1/2, M20	
Explosion proof type	ATEX, IECEx CCC, EAC,KCS	Ex db IIC T5/T6 Gb Ex tb IIIC T85°C/T100 °C Db	
	CSA/US	See certificate	
Enclosure	EN60529	IP66	
	NEMA	Type 4	Type 4X
Surge protection		Max.16KV	
Ambient Temp.	Standard type	-30°C~80°C	
	Low temp type	-40°C~80°C	
	Explosion proof	-40°C~80°C(T5) / -40°C~70°C(T6)	
	LCD operating	-30°C~85°C	
Linearity		±0.5% F.S.	
Sensitivity		±0.2% F.S.	
Hysteresis		±0.5% F.S.	
Repeatability		±0.3% F.S.	
Air consumption		Below 2.3LPM (Sup=0.14MPa)	
Required air quality		Class 3 (ISO 8573-1)	
Flow capacity		Over 100LPM (Sup=0.14MPa)	
Material		Aluminum die cast	Stainless Steel 316
Weight		3.5kg	7.0kg
HART version*		HART 7	
Position transmitter*	Connection type	2 Wire	
	Supply voltage	9~30V DC	
Alarm switch*		9~30V DC	

* Options

Product code

Model		TS9									
Option	Standard type Non-Contact Sensor(NCS) type	0 6									
Body material	Aluminum Stainless steel 316		0 5								
Acting type	Linear type Rotary type			L R							
Explosion proof type	ATEX & IECEx KCS,CCC, EAC CSA/US				A C S						
Connection type	Conduit entry / Air connection NPT1/2 / NPT1/4 M20 / NPT1/4 M20 / G1/4					3 4 5					
Lever (Linear type)	10 ~ 70mm 70 ~ 150mm For tubeless actuator (30mm) For tubeless actuator (70mm)						1 2 3 4				
Lever (Rotary type)	M6 x 39L NAMUR						1 5				
Ambient Temp.	-30°C~80°C (For CSA -20°C~80°C) -40°C~80°C -60°C~80°C (For EAC)							S L U			
Communication	None Position transmitter(4~20mA) HART communication HART with Position transmitter(4~20mA) HART with Advanced diagnostics HART with Advanced diagnostics and Position transmitter(4~20mA)								0 1 2 3 4 5		
Options	None With Alarm switch Natural gas type* Natural gas type with Alarm switch*									0 A	

* Natural gas type is only available with CSA and EAC.

Dimension [Unit:mm]

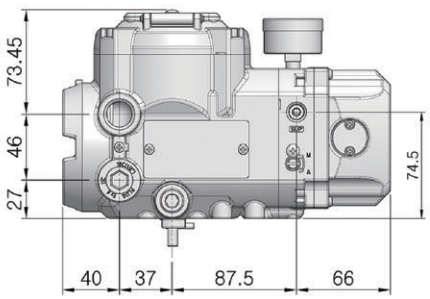

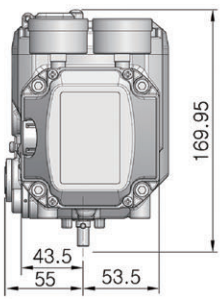

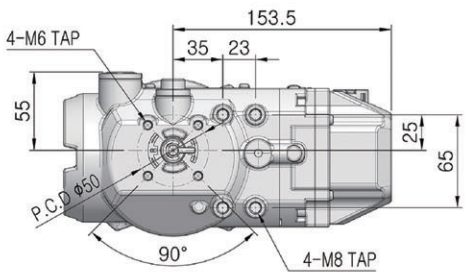

tissin

Solutions for control valve system

tissin

Tissin Co.,Ltd. (주)티씬

201-1105, No 397, Seokchen-ro, Ojeong-gu,
Bucheon-si, Gyeonggi-do, Korea 14449

Tel : +82-32-624-4573, Fax : +82-32-624-4574

www.tissin.co.kr

Version: PC-900EN_06/2024

We reserve the right to make technical changes or modify
the contents of this document without prior notice.

Copyright © 2024 Tissin
All rights reserved.

Printed in Korea