NO.	DATE	REVISION	DESIGNED	CHECKED	APPROVED
0	201118	RELEASED	DKMIN	–	DKMIN
1	220221	ADAPT TO REALITY	SHYEOM	–	DKMIN

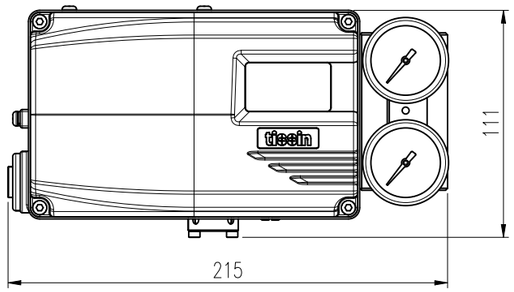

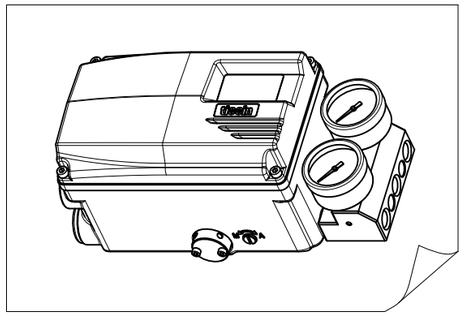

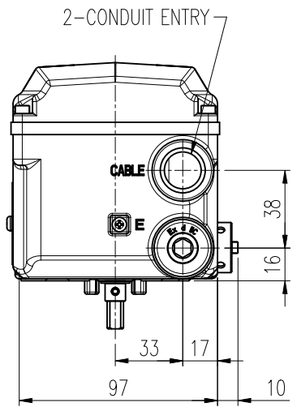

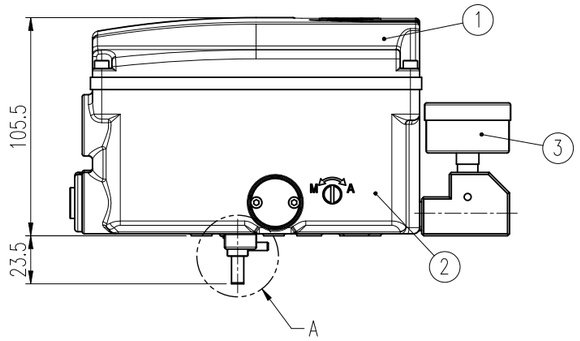

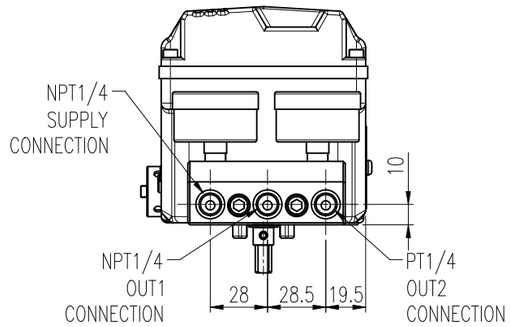

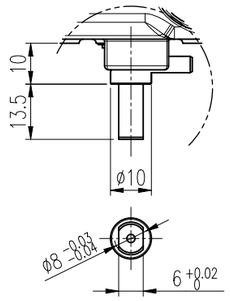

DETAIL A

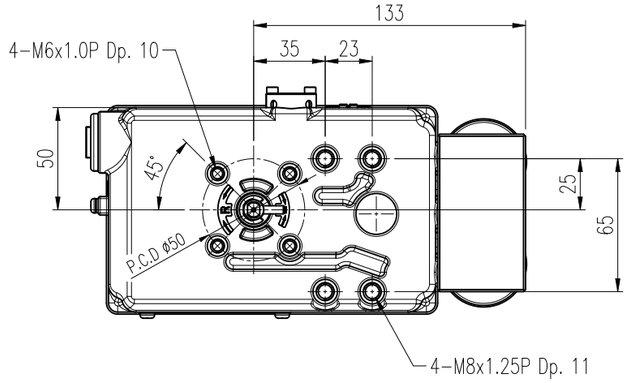

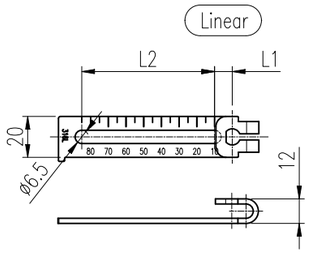

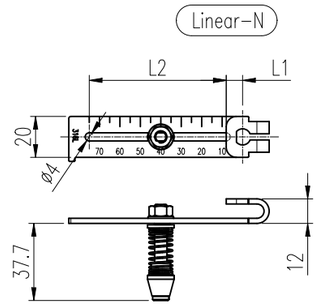

Lever Type	Stroke	L1	L2
1	10 ~ 80	8.66	64.95
2	70 ~ 150	60.62	77.94
3	10 ~ 30	8	27
4	10 ~ 70	8	67

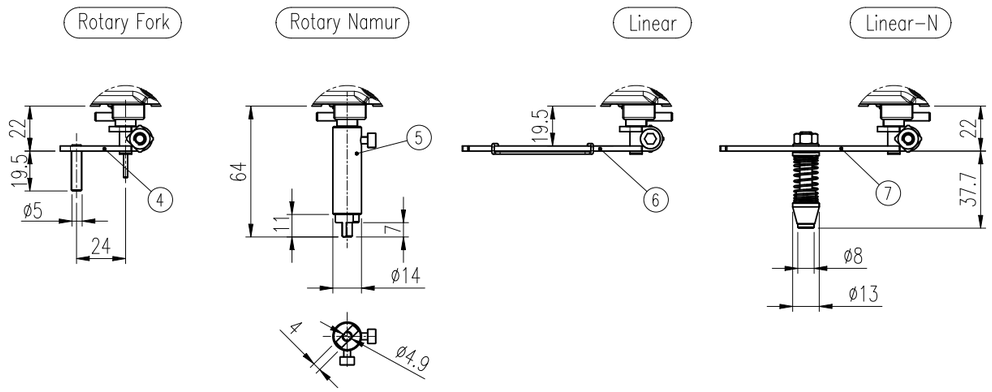

PART LIST

7	FEEDBACK LEVER (LINEAR-N)	STS316	1
6	FEEDBACK LEVER (LINEAR)	STS316	1
5	FEEDBACK LEVER (ROTARY NAMUR)	STS316	1
4	FEEDBACK LEVER (ROTARY)	STS316	1
3	PRESSURE GAUGE	STS316	1 or 2
2	COVER BASE	SCS14	1
1	BODY BASE	SCS14	1
NO.	PART NAME	MATERIAL	Q'TY

SPECIFICATIONS

Acting Type		Single or Double
Input Signal		4 ~ 20mA
Impedance		500 at 20mA DC
Working fluid		Compressed air
Max. working pressure		0.7 MPa
Min. working pressure		0.14 MPa
Air Consumption (sup=0.14MPa)		<2.3 LPM
Flow Capacity (sup=0.14MPa)		>100LPM
Ambient Temp.	Standard Type	-20°C ~ 85°C
	Low Temp. Type	-40°C ~ 85°C
	Explosion Proof	-40°C ~ 60°C (T5)
		-40°C ~ 40°C (T6)
	LCD Operating	-30°C ~ 85°C
Explosion Proof		Ex ia IIC T5/T6
Enclosure		IP66
Air Connection		NPT1/4
Gauge Connection		NPT1/8
Conduit entry		G(PF)1/2 or NPT1/2
Pressure Gauge		Ø42, Max. 0.8MPa
Stroke	Linear	10 ~ 150mm
	Rotary	0~90°
Linearity		±0.5% F.S.
Hysteresis		±0.5% F.S.
Sensitivity		±0.2% F.S.
Repeatability		±0.3% F.S.
Housing Meterial		Stainless Steel SCS14
Weight		4.16kg

SURFACE TEXTURE		WEIGHT	g	PROJECT	–	
FINISH		SHEET No.	1 / 1	PRODUCT NAME	SMART POSITIONER	
MATERIAL		UNIT	mm	MODEL	TS805	
QUANTITY		SCALE	1 / 3	TITLE	TS805	REV.
OTHERWISE NOTE		PROJECTION	3RD ANGLE	DWG. NO.	TS805 AA 01 A1	1
GENERAL DIM		DWG SIZE	A3			

TISSIN Co., Ltd.